THE IMPACT OF SEARCH ENGINES ON THE HOTEL DISTRIBUTION VALUE CHAIN

Serra Cantallops, Antoni[1]

Ramón Cardona, José[2]

Galbis Matarredona, Marc[3]

Universitat de les Illes Balears

antoni.serra@uib.es

jose.ramon@uib.es

mgalbis@gmail.com

Material original autorizado para su primera publicación en la revista académica REDMARKA. Revista Digital de Marketing Aplicado.
https://doi.org/10.17979/redma.2013.02.010.4798

Recibido: 10 Marzo 2013
Aceptado 18 Junio 2013

ABSTRACT

Internet is a very important sales channel for business in general, but it is becoming increasingly fundamental to the travel industry. The appearance of the Internet has increased the complexity of travel distribution and created new intermediaries and new means of distribution which in some cases have led to an increase in distribution costs. However, it has also made it much easier for suppliers to sell directly to consumers. We may say that the Internet has not only revolutionised the way that travel suppliers sell their products, but that it has also changed the way customers plan and book their travel, stimulating the

[1] Associate Professor. Marketing and Market Research Area. Business Economics Department. University of the Balearic Islands.
[2] Part Time Assistant Professor. Marketing and Market Research Area. Business Economics Department. University of the Balearic Islands.
[3] Part Time Assistant Professor. Marketing and Market Research Area. Business Economics Department. University of the Balearic Islands.

creation of websites designed to satisfy the needs of online travellers. In this change in consumer behaviour, search engines have played, play and will continue to play a very important role. This document analyses the mass use of search engines and its impact on the value chain in travel distribution, the implications for each of the participants in the value chain, and the repercussions the changes are causing in the management of travel company websites which increasingly see search engines as their most important tool for direct sales to consumers.

Keywords: Internet, Hotel, Search Engines.

INTRODUCTION

Information technologies have had a major impact on the tourism industry (Buhalis & Law, 2008; Law, Leung & Buhalis, 2009; Law, Qi & Buhalis, 2010), especially on the distribution of tourism services (Dabas & Manaktola, 2007; O'Connor & Frew, 2002a), becoming a key strategic element for the tourism companies (Buhalis & Kaldis, 2008).

Tourism distribution is one of the most critical factors for the prosperity and competitiveness of tourism organizations (Christopher, 1991) and many studies have been carried out in this regard (Pearce & Schott, 2005), in particular those related to the best mix of distribution (Huang, Chen & Wu, 2009; Koo, Martin & O'Connor, 2011; Pearce & Taniguchi, 2008). With the spread of the Internet, the number of studies that were conducted on electronic distribution was very important (Carroll & Siguaw, 2003; Dale, 2003; O'Connor & Frew, 2004; O'Connor & Murphy, 2004; O'Connor & Picolli, 2003), although not all of them of high-quality standards (O'Connor & Murphy, 2004). The emergence of the Internet has produced a radical transformation on the distribution (Kracht & Wang, 2010) and travel search process (Bond, Furr & Susskind, 1999; Susskind, Bond & Dev, 2003; Weber & Roehl, 1999), that allows access to a greater number of people and a closer relationship in the distribution channels (Buhalis & Licata, 2002; Buhalis, 1998).

Communication and information technologies have increased the complexity of tourism intermediation and not reduced it (Kracht & Wang, 2010; Palmer & McCole's 1999; Sarkar, Butler & Steinfield, 1998) appearing a multitude of alternative distribution channels (Buhalis & Law, 2008; Buhalis & O'Connor, 2005; O'Connor & Frew, 2002b).

A set of new intermediaries have emerged thanks to Internet (Buhalis & Licata, 2002) which have enabled both tourism providers and consumers to take advantage of direct access to information: business and tourism destinations websites, travel agencies on the web, internet portals, etc. Several studies have considered the role of Internet in the search of information process (Beritelli, Bieger & Laesser, 2007; Bonn, Furr & Susskind, 1998; Cai, Feng & Breiter, 2004; Card, Chen & Cole, 2003; Grønflaten, 2009; Gursoy & McCleary, 2004;

Hyde, 2006; Luo, Feng & Cai, 2005; Öörni, 2003; Pan & Fesenmaier, 2006; Pearce & Schott, 2005) and purchase (Järveläinen & Jussi, 2004; Kim & Kim, 2004; Miyazaki & Fernandez, 2001; Tse, 2003; Woodside & King, 2001).

The functions of electronic distribution can be spread across different channels (Cristiaanse & Zimmerman, 1999). In fact, consumers use different channels for different functions (Courtmanche, 2000; (Louvieris, Jung & Pandazis, 2001) and in many cases they combine traditional and electronic channels (Jung, Louvieris & Oppewal, 2002). Consumers prefer Internet to search for information and physical travel agencies to purchase (Jung, Louvieris & Oppewal, 2002), although in certain markets (e.g. United Kingdom) purchasing over the Internet already exceeds clearly purchases through physical travel agencies.

Internet is an ideal distribution channel for hotels as the cost of Internet distribution is minimal and does not require the potential customer to inspect and test the product to be able to get information about their attributes easily (Tse, 2003). Hotels can make use of multiple electronic distribution channels (Kang, Brewer & Baloglu, 2007; O'Coonor & Frew, 2002b): Website (Carroll & Siguaw, 2003; Cline, 2001; Gilbert & Powell-Perry, 2002; Gregory Kline & Breiter, 2005; Jeong & Choi, 2004), Online Travel Agencies (Dunn, 2003), GDS and CRS (Emmer, Tauck, Wilkinson & Moore, 2003) and travel search engines (Helsel & Cullen, 2005).

The rapid growth in the popularity of search engines (Sen, 2005), first apperared in 1994 (Pinkerton, 2000), and their employment by Internet users is affecting the way that people book travel directly and irreversibly (Brin & Page, 1998; Pan & Fesenmaier, 2006).

These changes affect what is known as leisure and unmanaged business travel. Managed business travel is largely made on a centralised basis through dedicated travel agencies and pre-arranged agreements with travel suppliers, meaning that the traveller does not have the freedom to contract the services directly nor from suppliers other than those with corporate agreements (Buhalis & Laws, 2001).

Traditional travel distribution had suffered few changes and few improvements until the appearance of the Internet and the revolution it has brought to the industry (Buhalis, 1998; O'Connor & Frew, 2000; Smith & Jenner, 1998). Changes are so deep and so important that we may even dare to talk about a new paradigm in travel distribution (Buhalis & Licata, 2002), and particularly in hotel distribution (O'Coonor & Frew, 2004). It must be remembered that up until just a few years ago, many resort hotels were only distributed through traditional tour operators, occasionally even with guaranteed contracts, and the only advertising they carried out was to appear in the tour operator brochures and catalogues. Internet has given them the chance to distribute their products through other intermediaries (Christodoulidou, Brewer, Feinstein & Bai, 2007; O'Coonor & Frew, 2004), has opened the door to direct sales to consumers, and has even allowed them to carry out low-cost advertising campaigns with a quantifiable return on investment which is often also attractive. Currently, the most important reservation channels for hotels are: hotel or chain call center, the hotel website and CRS (Kang, Brewer & Baloglu, 2007).

If Internet does not have greater weight in hotel bookings is because there are many customers who search (Pan & Fesenmaier, 2000; Ratchford, Talukdar & Lee, 2001) and few who book (Morrison, Jing, O'Leary & Cai, 2001) due to the perceived risk (Kim, Kim & Leong, 2005). To increase sales and bookings through Internet is necessary to reduce the perceived risk by customers (Kolsaker, Lee-Kelley & Choy, 2004; Öorni & Klein, 2003). Although this fear may have been reduced in recent years, further efforts are still needed in this regard.

THE TRAVEL VALUE CHAIN

The travel value chain was, traditionally, very atomised and comprised a large number of suppliers and intermediaries (Buhalis & Laws, 2001). This complexity responded to the needs of travel suppliers and travellers themselves.

Wynne *et al.* (2001) proposed a value chain for the case of South Africa which, in our opinion, is valid for any leisure travel destination, even though the

different elements in the chain may be more developed in one destination than in another. The model identifies local inbound tour operators, or inbound travel agencies (Buhalis & Laws, 2001), in the destination itself, responsible for aggregating and packaging the services of different suppliers. The products may include hotels, excursions, golf classes, etc. And, once the basic offer has been defined, these products/services are then offered to outbound tour operators operating in the country of origin of the final customers. The outbound tour operators combine the services of inbound tour operators to provide a more ample service with a greater number of options and combinations to satisfy the needs of travellers. Finally, these vacation packages developed by the wholesalers are then sold to the final customer through a network of owned or third part travel agencies. The agency is the final link in the chain, providing travellers with the information and advice they require (Figure 1).

FIGURE 1

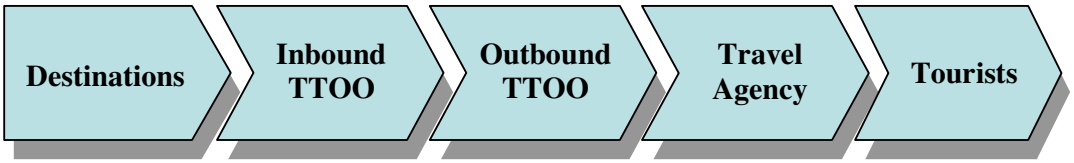

Source: Wynne *et al.* (2001).

In this traditional value chain for travel distribution, travel agencies play an important role as advisors providing additional information to travellers to assist them in making their decisions and defining their trip to their chosen destination.

Generally, travellers would visit travel agents bringing with them recommendations and suggestions from friends and family and the agency would assist in finalising the definition of the trip thanks to the advice provided by agents.

The new travel distribution

Internet has revolutionised destination marketing and distribution (Buhalis y Laws, 2001; Wang & Qualls, 2007) thanks to the opportunity it provides to communicate directly with travellers and to publish information on the tourism destination and its facilities and attractions (Buhalis & Licata, 2002; Tse, 2003). This favours direct sales to travellers by suppliers and inbound tour operators, thus avoiding the existing chain of intermediaries and maximising revenues thanks to savings in commission costs (Buhalis y Laws, 2001; Buhalis & Licata, 2002).

Some service providers such as the airlines developed their own reservation systems to improve the management of their product inventory and make it easier for agencies and other travel intermediaries to book their products. These systems are what became known as the GDS (Global Distribution Systems). Over time the services were split off from the airlines, becoming independent companies and extending their booking services to hotel chains and car rental companies (Buhalis, 2004; Copeland & McKenney, 1988; Emmer, Tauck, Wilkinson & Moore, 2003; French, 1998; Kärcher, 1996; Truitt, Teye & Farris, 1991).

Hotel chains have also developed their own reservation systems to manage their room inventory, rates, etc. (Kang, Brewer & Baloglu, 2007; O'Coonor & Frew, 2002b). These systems are known as CRS (Central Reservation Systems). Over time the hotel chains found that the cost of connecting their booking systems to each of the GDS was astronomical and also technically very challenging. In 1997 a technology company named Pegasus appeared on the scene after having developed a "switch" which made it easier for the GDS to integrate with the different CRS but added a different type of cost to the distribution chain.

After developing their CRS, hotel chains also created Call Centres to make bookings directly into their systems (Kang, Brewer & Baloglu, 2007), bypassing the GDS and thus saving the travel agency commission on bookings made directly by guests as well as the transaction fees charged by the GDS and Pegasus.

With the appearance of the Internet, new types of intermediaries have emerged and many systems have established mutual connections. This has led to an increase in the complexity of the technology and of travel distribution while at the same time adding new distribution costs (Anchar & Walden, 2000; Bowden, 2007; Buhalis & Law, 2008; Buhalis & Licata, 2002; Buhalis & O'Connor, 2005; Kracht & Wang, 2010; O'Connor & Frew, 2002b).

On the one hand, technology intermediaries such as Pegasus have created their own websites such as www.hotelbook.com and sell directly to consumers, charging a commission on sales in addition to their transaction fee.

The GDS have also developed their own websites such as www.amadeus.net or have created online travel agencies such as www.rumbo.com in the case of Amadeus and Terra (Telefónica).

Meanwhile, tour operators have significantly increased sales through its own websites (Buhalis & Law, 2008), thus reducing their dependence on travel agencies.

- *Online Travel Agencies (OTAs).*

When the Internet first appeared, online agencies began to sell hotel rooms on a commission basis following the traditional travel agency model (Chircu & Kauffman, 2000; Kasavana & Singh, 2002; McIvor, O'Reilly & Ponsonby, 2003; Smith & Rupp, 2004). They quickly developed and moved on to a merchant model in which the agency negotiates a net rate for the hotel room and then adds a mark-up to create the final sale price. The mark-up varies between 15% to 30%.

The rapid growth of this type of agency and the high mark-ups they add on to rates has led to conflict in recent years with hotel chains. In fact some hotel chains such as Intercontinental have decided not to sell rooms through online agencies such as Expedia. This model is not so controversial for resort hotels given that they are more accustomed to very similar model used by traditional tour operators. However, in city hotels the model presents a problem due to the fact that the negotiation of net rates and high mark-ups threatens the traditional

model that hotel chains use with major travel agency networks involving commissions of around 10% and annual override payments depending on sales. In fact, in recent years the rate of commission charged by the traditional agency networks have increased due to the pressure they have applied to hotel chains to pay them the same as they pay the online agencies.

Priceline.com surprised the market with an innovative model based on “opaque rates”, in which the website user chooses a category of hotel, an area of the city where they would like to stay and the maximum price they are willing to pay; a price they are obliged to pay if any hotel accepts their offer. Once the booking has been accepted by the hotel, the user is told the name of the hotel. Priceline.com earns its revenues from the difference between the price paid by the user and the price accepted by the hotel. In this model the customer is initially unaware of the hotel where they will stay and the price accepted by the hotel remains confidential. This allows hotels to offer significant discounts in periods of low demand without this having any negative impact on their brand image (Shapiro & Zillante, 2009).

- *Affiliate Networks*

These are not exactly booking intermediaries, but rather marketing investments. Affiliate networks such as Zanox.com or Tradedoubler.com manage advertising tools (banners, text links, etc…) for customers which they then distribute to an affiliate network to generate revenues (Constantinides, 2002). The affiliates normally operate specialist websites with low traffic volumes which generate revenues through the advertising they publish on their sites based on payments for each click, for customer acquisition (registration of a user in a certain website) or commissions on product sales. For hotels a commission of between 7% and 10% may be available, compared to 2% to 3% for airlines and 10% to 13% for vacation packages.

The popularity of travel on the Internet and the success of travel sales have led to the creation of a dense network of affiliated websites which sell large volumes of travel products in exchange for a commission.

- *Metasearchers*

One of the phenomena that has seen a great deal of growth in recent years are so-called metasearchers such as kayak.com or sidestep.com. These websites allow users to search for a certain travel product or service and then show a results page with the different companies that sell that product or service and the price at which it is on sale in each of their websites (Kracht & Wang, 2010). The metasearchers charge a fee for each click that users make on participating websites. The average Internet user checks between 3 and 4 websites before buying a product. Metasearchers aim to allow users to book after visiting just one site which makes the price comparison for them. The searches on these sites have very high conversion rates thanks to the fact that when the user clicks through to the supplier website they already know the price that they will see and have already compared it with other sites.

- *Travel Reviews*

This is currently one of the fastest growing phenomena. Webs such as tripadvisors.com or igougo.com (Buhalis & Law, 2008) are already very mature sites and have almost become an obligatory stop for online travel buyers. According to a recent survey by Forrester Research, 30% of online travel buyers read the online advice of other travellers. These websites have increased their relevance recently with the development of the so-called web 2.0 and are attracting increasing visitor traffic. The websites allow visitors to read thousands of comments and opinions on hotels made by people who have actually stayed at those hotels and are beginning to have a large influence in product purchase decisions (Gunter, Campbell, Touri & Gibson, 2009; Mack, Blose & Pan, 2008; Pan, MacLaurin & Crotts, 2007; Vermeulen & Seegers, 2009; Ye, Law & Gu, 2009; Zehrer, Crotts & Magnini, 2011). The sites charge a certain amount per click to the suppliers chosen by visitors, although they are also beginning to test models based on commissions for some of their services.

- *Social networks*

Another phenomenon that is growing very quickly in recent times is the social network, and particularly the social networks that deal with travel (Buhalis & Law, 2008). In October 2007, WAYN.com, a travel social network announced that it had reached a figure of 10 million users. Other social networks such as facebook.com or myspace.com are promoting specific travel networks to cover this market niche. Even youtube.com is creating a specific travel channel to assist users in their travel planning and hotel selection through youtube (Wang & Fesenmaier, 2004; Xiang & Gretzel, 2010).

FIGURE 2

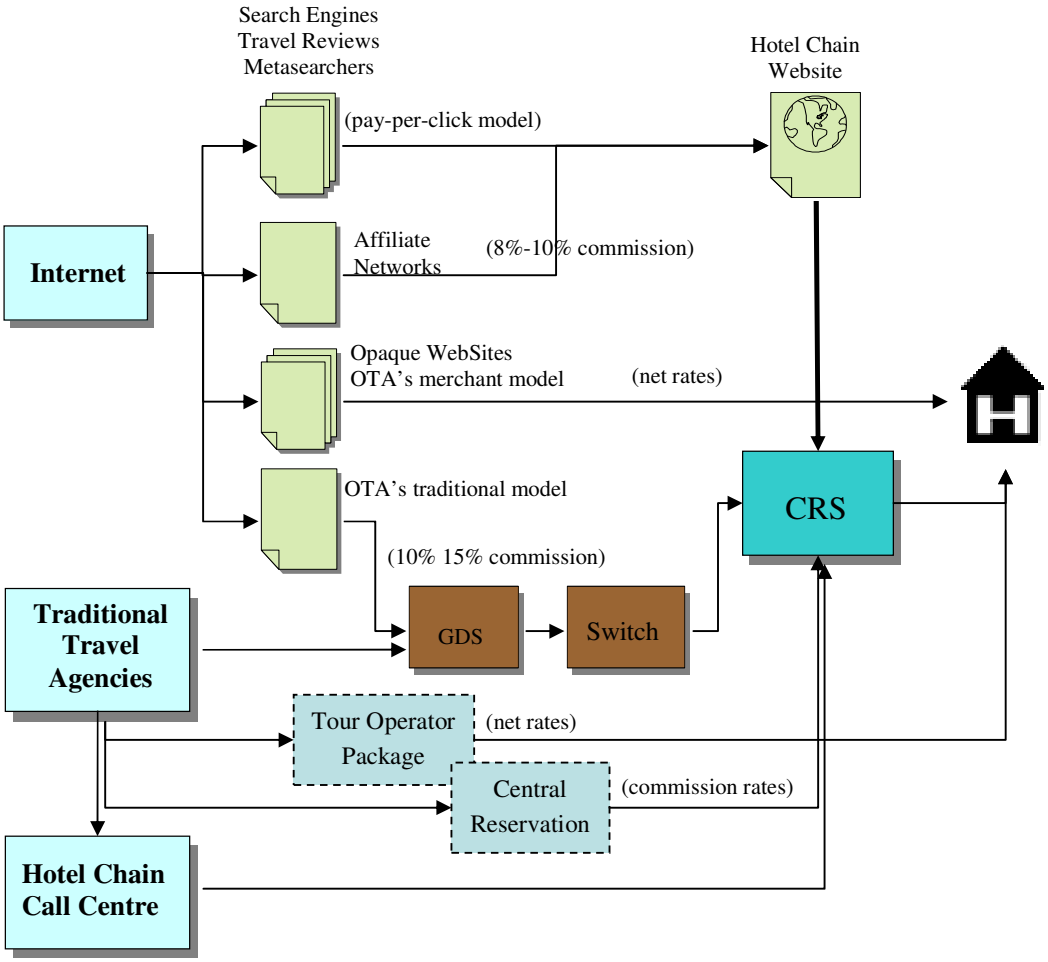

Source: own elaboration[4]

- *Search engines*

Nevertheless, the players that have achieved the greatest impact in the online travel booking space are the search engines (Kracht & Wang, 2010). Google or Yahoo generate millions of travel-related bookings every day; millions of potential travellers seeking information on a destination or a particular product. This document aims to provide greater detail on the huge impact that search engines have in the travel distribution value chain. The figure 2 describes the typical current distribution model for a hotel chain.

Online distribution in figures

Online travel sales have enjoyed double digit growth for a number of years and is forecasted to continue to grow over the coming years. The Centre for Regional and Tourism Research estimated the European online travel market to have reached a total of 70 billion euro in 2009. The drivers behind this growth are, on the one hand, a change in consumer behaviour as Internet users begin to buy more of their travel online and, on the other hand, the growth in the number of users worldwide. According to Internet World Stats[5], in June 2010, Internet penetration in Europe was 58.4% and in North America was 77.4%.

The market share of OTAs in online distribution has been growing and is forecast to continue to increase. Both EyeforTravel and Forrester Research estimate the market share of OTAs at between 50% and 68% of all online sales in 2007 depending on the different European countries.

In hotel distribution, the hotel chains enjoy considerable advantages over independent hotels given that their investment capacity allows them to invest in technology and create powerful, well-positioned websites, while their

[4] Metasearchers: kayak.com, sidestep.com
Search engines: google.com, yahoo.com, msn.com, ask.com
Review Sites: tripadvisors.com, igougo.com
OTAs: expedia.com, travelocity.com, priceline.com, bookings.com
[5] www.internetworldstats.com, information updated on 11 February 2011.

recognisable brand names increase the effectiveness of online marketing to drive direct sales. Independent hotels, however, with their more limited resources, tend to leave the distribution of their inventory to the intermediaries. Electronic commerce has been less common in small hotels (Murphy, 2003) since they have shortcomings in its management and implementation (Main, 2002; Murphy & Kielgast, 2008). The mass adoption of Internet distribution by independent hotels in recent years has thus meant that the market share of OTAs has generally increased, while the share of hotel chains has remained stable at best.

Change in consumer behaviour

For more than a decade many researchers have been claiming that the appearance of Internet reduces the importance and role of agencies in travel distribution (Buhalis & Kaldis, 2008; Gilbert, Beveridge & Lee-Kelley, 2005). Agents could be the victims of disintermediation in the tourism distribution channels (Barnett y Standing, 2001; Bennett & Lai, 2005; Buhalis & Licata, 2002; Buhalis, 1998; Dabas & Manaktola, 2007; Law, 2009; Law, Leung & Wong, 2004; O'Connor & Frew, 2002b; Tsay & Agrawal, 2004; Tse, 2003). The key factor for travel agencies is their ability to provide personal information and advice to travellers (Dolnicar & Laesser, 2007; O'Conner & Frew, 2002a; Palmer & McCole, 1999; Walle, 1999).

The introduction of the Internet, the massive use of search engines, and the appearance of websites with comments, advice and personal experiences in relation to hotels and airlines, have allowed travellers to obtain relevant and accurate information, contrast varying opinions and even interact with other travellers that know the destination or hotel. This new way of interacting with the online world, known as electronic word-of-mouth or eWOM (Bronner & de Hoog, 2011; Hennig-Thurau & Walsh, 2003; Hennig-Thurau, Gwinner, Walsh & Gremler, 2004; Huang, Chou & Lan, 2007; Litvin, Golsmith & Pan, 2008; Park & Lee, 2009; Sun, Youn, Wu & Kuntaroporn, 2006), affects their decision-making process (Chevalier & Mayzlin, 2006; Sen & Lerman, 2007), meaning that the once useful advice received from travel agents has now been replaced by these

rapidly growing websites (Buhalis & Law, 2008; Pan, MacLaurin & Crotts, 2007; Vermeulen & Seegers, 2009; Ye, Law & Gu, 2009).

According to a PhoCusWright survey[6], 64% of users looking to buy travel online use a search engine to help decide what to buy, while 47% also use them during the decision-making process. According to a survey by conScore Networks, at least 73% of online travel buyers used search engines in the weeks leading up to their online purchase.

According to Forrester Research, iCrossing and other leading online behaviour researchers[7], after e-mail, search engines are the most popular tool used by Internet users. More than 80%[8] of Internet sessions begin with a search using a search engine. Behaviour amongst online travel users is broadly similar.

In a recent survey, HeBS (2007) identified the following key factors:

- Search engines contribute an average of more than 50% of the traffic to the websites, with the figure oscillating between 48% and 75%.
- The sales generated by visitors from search engines represent the biggest sales channel for the websites.
- Google and Yahoo are the leading search engines by traffic volume in the world.

From our own research experience, the following conclusions can be mentioned:

- The percentage of visitors to Spanish hotel company websites that comes from search engines is greater than 60%. As Kracht & Wang (2010) stated search engines are difficult to avoid.
- In Europe, Google is almost in a monopoly position and is way ahead of Yahoo or Ask with a minimum market share of over 85% in each country.

[6] PhoCusWright Consumer Travel Trends, Ninth edition, 2007
[7] Data from HeBS (2007)
[8] 91% in USA and 80% EU-25. Source: Pew Internet, Eurostat, CETIC, CCNIC, The Public Opinion Foundation

In some countries such as Spain and Germany this share can be up to 97%[9]

- The greater the brand recognition of your website, the greater the number of visits you will receive through search engines, and the greater your clickthrough ratio[10]. This ratio increases for international searches in which the names of national supplier or intermediary websites appear which are recognised by the user. This factor is directly related to credibility and confidence in a brand and, as a consequence, in its website.
- Search engine strategies need to contain both SEM (marketing) and SEO (natural results) strategies (O'Connor, 2009a), with both activities being perfectly complementary.
- Pay-per-click has another advantage over online advertising for marketers. As marketers only have to pay for each click, no matter how many times their ad appears in Google, if there are no clicks there is no cost, meaning that the ads are contributing to brand-building completely free of charge.

Impact on the travel distribution value chain

To study the impact on the travel distribution value chain of the Internet in general and search engines in particular as a driver of decision-making in travel purchases, we must first analyse the service delivery process for travel. We may identify 6 stages in the travel service process (Figure 3): information search, planning, product selection, booking, service deliver and post-sale feedback.

FIGURE 3

[9] Data from Google Spain referring to September 2007
[10] Clickthrough: the ratio obtained from dividing the number of clicks obtained by the number of searches made.

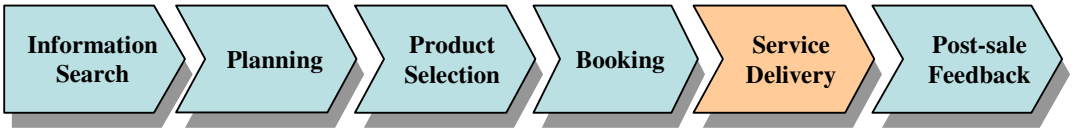

Source: own elaboration

For each stage of the process we may find several Internet websites which cater to that need and has an impact on each of the stages, or even some websites that affect several stages of the process (Table 1).

TABLE 1

	Metasearchers	Search Engines	Review Sites	OTAs	Wiki
Information Search	•	•••	•	•	••
Planning	•	••	••	••	•
Product Selection	••	•••	•••	••	n/a
Booking	•••	•••	•••	•••	n/a
Service Delivery					
Post-Sale & Feedback	n/a	n/a	•••	••	n/a

Source: own elaboration[11]

1) **Information search:** The main players in the first stage are the search engines. As mentioned previously, 80% of users start their Internet session with a search. Information is sought on a destination in particular or for travel

[11] Metasearchers: kayak.com, sidestep.com
Search engines: google.com, yahoo.com, msn.com, ask.com
Review Sites: tripadvisors.com, igougo.com
OTAs: expedia.com, travelocity.com, priceline.com, bookings.com

ideas to decide on which destination to choose. Other players such as Wikipedia, however, are also beginning to become relevant in the choice of destinations. Normally people do not visit Wikipedia directly, but the excellent indexation the site has achieved in search engines make it one of the first clicks made by users before they decide on their destination (Höchstötter & Lewandowski, 2009; Medelyan, Milne, Legg & Witten, 2009).

2) **Planning**: Once the destination has been chosen, it is time to plan the trip, exploration of the destination and the route to be taken. This stage in the process is generally much more relevant in long-stay leisure breaks and does not make as much sense for a short break or a business trip to the city. For this stage there are sites such as yahoo travel or hotelchatter.com where travellers write about their experiences and their chosen routes, and even publish photos to help other users define their own route. These websites also contain recommendations on hotels or airlines (Buhalis & Law, 2008; Wang, Yu & Fesenmaier, 2002).

3) **Product/Service selection:** This stage is for travellers who know their destination and just need to know where to stay or with which airline to fly. Many users type the name of the hotel directly into Google or the hotel plus the destination to then choose the hotel or supplier that takes their fancy. Website with user comments, however, have penetrated this market very quickly. The most popular sites are tripadvisors or igougo with their numerous comments on products and suggestions to help visitors make their decision. The OTAs have also added comments in recent times, however, given their growing importance, and are thus competing with the mentioned websites at this stage in the process (Lin, Jones & Westwood, 2009).

4) **Booking:** Finally the booking is made through the supplier website or an OTA. As mentioned previously, up to 60% of the visits to these pages come from a search engine, making the search engines once again highly relevant at this stage.

5) **Service delivery**: Obviously service delivery is made by the supplier.

6) **Feedback on service**: With the growth of web 2.0 since mid-2005, this final stage in the chain has acquired an importance it had never enjoyed before or which was confined to a reduced circle of friends and family. Nowadays, sharing your travel experiences on the Internet will help other people choose and plan their travel, meaning the value chain has a feedback mechanism which is positive for travellers as it adds value for users and improves the process in general.

If we analyse the traditional model (Buhalis & Laws, 2001; Buhalis & Licata, 2002; Kracht & Wang, 2010; Wynne et al., 2001), we notice that a large part of the functions performed by tour operators (inbound and outbound) is being replaced by the online travel agencies (OTAs) which are contracting directly with suppliers and selling their products to international markets (Buhalis & Licata, 2002; Enz, 2003; Kracht & Wang, 2010; Myung, Li & Bai, 2009). The growth of the Internet has led to the emergence of a new player: the supplier who sells directly to consumers (Nassar, 2002); meaning that the traditional value chain has now changed to include new players which are generating increasing volumes and relevance every year (Figure 4), thus giving way to what is now a new paradigm for travel distribution (Buhalis & Licata, 2002; Kracht & Wang, 2010).

FIGURE 4

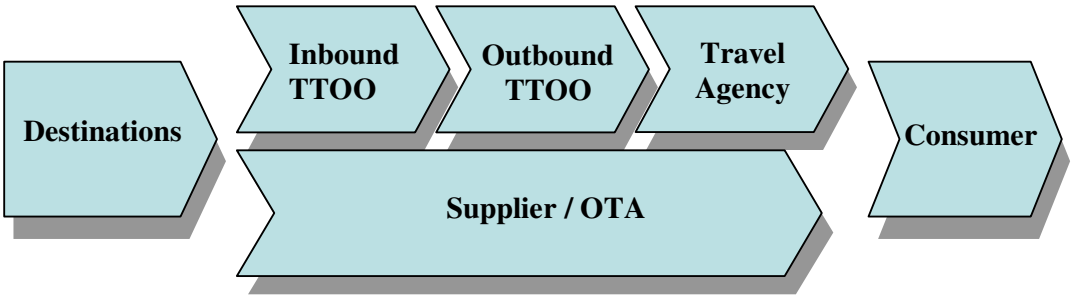

Source: Adapted from Buhalis & Licata (2002); Kracht & Wang (2010)

The search engines

In the new travel distribution value chain, the search engines are the most important players and are having the greatest impact on changing consumer behaviour (Kracht & Wang, 2010; Murphy & Kielgast, 2008).

When we talk about search engines, we are referring to the following four features:

- Organic Search results, are the results obtained from a search engine that do not involve any advertising payments. Search engines return organic search results because they calculate that they are the most relevant results for the terms used in the search. Actions aimed at improving organic search results for our website are called Search Engine Optimization (SEO). SEO is complex and involves the use of Title tag, Meta tags, headings, etc. to improve the page (O'Connor, 2009a; Sen, 2005).
- Paid-for results also known as sponsored links, are text messages that have an embedded text link which are placed in search engines by advertisers who pay a certain amount every time a user clicks on the link. This advertising is known as Search Engine Marketing (SEM) (Pan, Litvin & O'Donnell, 2007). Position in the search results is extremely important and rather than modify the Web you can pay for positioning (Sen, 2005). These links tend to be separated from organic search and warn that it is advertising, as in the case of Google that locates them on the right side with a line or separated before the organic search but different color (Höchstötter & Lewandowski, 2009; O'Connor, 2009a). But it is not clear that consumers distinguish between both types, sponsored and organic results (Lastowka, 2002). One advantage is that changes in the algorithms do not affect the paid ads (O'Connor, 2009a).
- Local search. This is a rapidly growing service which is especially important for the travel industry as it is used for searching for services within destinations. It has already achieved a share of 30% of all searches, and includes the services of the yellow pages, Google maps, etc.

- Searches on mobile devices. These should be taken into account in the medium term given that the opening up of Internet access to mobile devices such as telephones and PDAs means the potential growth is enormous.

Each of these Search Engine Marketing formats requires specific development, but based around an integrated strategy which ensures that actions are complementary.

The impact of search engines on the websites of travel suppliers

The major impact the search engines are having on the origin of the visitors to travel supplier websites has led to companies rapidly updating the design and structure of their sites to adapt to the requirements of the search engines (Murphy & Kielgast, 2008).

A survey by HeBS in October 2007 (2007b) amongst travel company executives confirmed that SEO was amongst the most important concerns and priorities for 2008 of 72% of companies. The same survey indicatesd that companies were allocating a sixth of their annual budgets in 2008 to investments to improve indexing in search engines.

To benefit from changing consumer behaviour travel suppliers and, above all, travel intermediaries have launched an offensive to “conquer” the prime positions on search engine results pages when users search for information on the hotels in a given destination or information on a particular hotel.

FIGURE 5

Source: Höchstötter & Lewandowski (2009) and own elaboration

Different surveys reveal that 70% of users do not get past the first page of search results, only 10% reach the second page, and the third and successive pages make up 5% of the total (Höchstötter & Lewandowski, 2009; iProspects, 2006; Janse & Spink, 2006; Murphy & Kielgast, 2008; O'Connor, 2009a). If a company website does not make it into the first ten results of a search engine, i.e. on the first page, it may as well not exist given that very few users will get any further than the first ten results.

The success of SEO is not to just get on the first page of search engine results, but also that the text which appears must be relevant to what the user has been

searching and the “landing page” must also be relevant to the terms searched (Jansen, Brown & Resnick, 2007).

Let’s see an example. If users search for a “luxury hotel in Madrid”, they will not click on links which state “cheap hostals” or “hotels at 50€”. Furthermore, if they click on a link that says “exclusive hotel in Madrid” and find that the landing page is the home page of a travel agency or any other page that is not closely related to the expression they have used to search, users will just click on the “Back” button on their web browser and then click on another link (Figure 5).

FIGURE 6

Source: own elaboration

As may be seen in the results, the Title and Description of the indexed page is coherent with the expression used in the search (Figure 6).

As we have mentioned, the final factor to be taken into account is that the landing page must contain information relevant to the expression used to search (Jansen, Brown & Resnick, 2007).

There is a technical component to appearing as an indexed page in the results page of the search engines. This document does not aim to provide an exhaustive description and recommendation of the techniques to use in SEO,

but we do consider it important to define some basic recommendations which must be followed to ensure some success in positioning so that readers are able to identify the methods followed by suppliers to adapt their websites to the needs of search engines.

Although search engines algorithms are complex, secrets and frequently change (O'Connor, 2009a; Sen, 2005), in general there is a fair amount of common ground in the minimum requirements which need to be in place:

1. Take care of the technical side of things: although this is not an exhaustive review of the techniques to employ, the following aspects should be optimised in order to create a search engine friendly website able to be indexed by search engines:
    a. Avoid the use of: flash, frames, JavaScript, etc…
    b. Mainly use pages programmed in HTML or PHP[12]
    c. Build up a structure of short and logical URLs (maximum 150 characters)
2. Get external links: get direct links (with no redirections) to your website from other relevant websites such as directories, yellow pages, etc… some sites in which you should be listed are: dmoz.org, Wikipedia, alexa, etc. Banners are not very effective (Brey, So, Kim & Morrison, 2007; Dreze & Hussherr, 2003).
3. Correct choice of keywords. Keywords are expressions for which you wish your website to appear in search engine results. For a hotel website this may be "hotel", "resort", "all-inclusive", etc… Nevertheless, not many users search for hotels in Google, but rather search for "hotel in Madrid" or "all-inclusive hotel in punta cana", so the more detail we have in our keywords the better we can position our pages given that there will be less competition and the title and description of our indexed page will be more relevant to the search terms used by the user.

[12] Website programming languages

4. Title and description of the page coherent with the search terms used: as mentioned in the previous point, we must use titles and descriptions for the pages which are relevant to the keywords for which we wish to achieve positioning.
5. Content of the landing page relevant to the keywords used in the search (Jansen, Brown & Resnick, 2007). The landing page should contain information and content related to the terms searched. If a page is indexed for the keywords "luxury hotel in Madrid" and then the user is sent direct to the home page, they may well click the back button to visit another page given that the landing page did not contain information on the luxury hotel they were seeking.

If a supplier or intermediary wishes to obtain more traffic from search engines they must optimise their website pages and structure for search engines (Pan & Li, 2011). They must bear in mind that the Home page will not be the most visited page on the site, but rather the page for hotels in Mallorca or in Madrid, for example. Suppliers must therefore create pages designed especially with their keywords in mind.

CONCLUSIONS

Search engines have changed the way we plan travel and gather travel information for ever (Pan & Fesenmaier, 2006). They are new players in the travel value chain and are being used on a massive scale by travellers (Kracht & Wang, 2010). Nobody can question their importance and influence in the travel booking process. In addition to the search engines, the recent growth of web 2.0 features means that Internet is not only affecting the way we research and plan our travel, but also having an important affect on our behaviour after we travel, flooding the Internet with our opinions on different travel products to recommend or warn fellow travellers about the different travel products (Bronner & de Hoog, 2011; Gunter, Campbell, Touri & Gibson, 2009; Park & Lee, 2009; Vermeulen & Seegers, 2009; Ye, Law & Gu, 2009; Zehrer, Crotts & Magnini, 2011).

The influence of the search engines on distribution has led to travel intermediaries and suppliers engaging more actively with the Internet and optimising their websites in an attempt to capture the largest possible number of visitors. This has led to a "war" to obtain a position on the initial results pages of search engines, creating new players in the value chain and making online distribution even more complex (Kracht & Wang, 2010). Travel suppliers are making a considerable effort: airlines, hotel chains, and car rental companies see this new model as a way of reducing costs given that they pay only for each click rather than paying a commission on sales. Direct sales to consumers increase their awareness of the needs of travellers as it allows them to contact and communicate directly with them by e-mail, functions which were previously in the hands of the intermediaries.

Given the relevance of the search engines phenomenon, and the fact that commission levels in the hotel industry may sometimes reach up to 30%, it would be no surprise in the short term if search engines such as Google were to demand their slice of the cake and change their pay-per-click model for a commission on sales. In summary, the search engines are already an active part of the travel planning and decision-making process and have joined the travel distribution value chain. It may be considered a logical step for them to request a commission for the "advice" they provide as was and as remains the case in traditional travel agencies. A clear example that disintermediation in a part of the distribution value chain can lead to reintermediation in another part.

REFERENCES

Anckar, B. & Walden, P. (2000). Destination Maui? An exploratory assessment of the efficacy of self-booking in travel. *Electronic Markets*, 10(2), pp. 110-119.

Anckar, B. & Walden, P. (2002). Self-booking of high- and low-complexity travel products: exploratory findings. *Information Technology & Tourism*, 4(3/4), pp. 151-165.

Barnett, M. & Standing, C. (2001). Repositioning travel agencies on the internet. *Journal of Vacation Marketing*, 7(2), pp. 143-152.

Bennett, M. M. & Lai, C. W. K. (2005). The impact of the internet on travel agencies in Taiwan, *Tourism and Hospitality Research*, 6(1), pp. 8-23.

Beritelli, P., Bieger, T. & Laesser, C. (2007). The impact of the internet on information sources portfolios. *Journal of Travel & Tourism Marketing*, 22(1), pp. 63-80.

Bond, M. A., Furr, H. L. & Susskind, A. M. (1999). Predicting a behavioral profile of pleasure travelers on the basis of internet use segmentation. *Journal of Travel Research,* 37(4), pp. 333-341.

Bowden, J. (2007). The rise of the ICT-dependent home-based travel agents: mass tourism to mass travel entrepreneurship. *Information Technology & Tourism*, 9(2), pp. 79-97.

Brey, E. T., So, S. I., Kim, D. Y. & Morrison, A. M. (2007). Web-based permission marketing: Segmentation for the lodging industry. *Tourism management*, 28(6), pp. 1408-1416.

Brin, S. & Page, L. (1998). The anatomy of a large scale hypertextual web search engine. *Computer Networks and ISDN Systems,* 30(1-7), pp. 107-117.

Bronner, F. & de Hoog, R. (2011). Vacationers and eWOM: Who posts, and why, where, and what? *Journal of Travel Research*, 50(1), pp. 15-26.

Buhalis, D. (1998). Strategic use of information technologies in the tourism industry. *Tourism Management,* 19(5), pp. 409-421.

Buhalis, D. (2004). eAirlines: strategic and tactical use of ICTs in the airline industry. *Information & Management*, 41(7), pp. 805-825.

Buhalis, D. & Kaldis, K. (2008). eEnabled internet distribution for small and medium sized hotels: the case of Athens. *Tourism Recreation Research*, 33(1), pp. 67-81.

Buhalis, D. & Law, R. (2008). Progress in information technology & tourism management: 20 years on and 10 years after the internet -The state of eTourism research. *Tourism Management*, 29(4), pp. 609-623.

Buhalis, D. & Laws, E. (2001). *Tourism distribution channels: Practices, issues and transformations*. London: Continuum.

Buhalis, D. & Licata, M. C. (2002). The future eTourism intermediaries. *Tourism Management,* 23(3), pp. 207-220.

Buhalis, D. & O'Connor, P. (2005). Information communication technology revolutionizing tourism. *Tourism Recreation Research*, 30(3), pp. 7-16.

Cai, L. A., Feng, R. & Breiter, D. (2004) Tourist purchase decision involvement and information preferences. *Journal of Vacation Marketing*, 10(2), pp. 138–148.

Card, J. A., Chen, C-Y. & Cole, S. T. (2003). Online travel products shopping: Differences between shoppers and nonshoppers. *Journal of Travel Research*, 42(2), pp. 133-139.

Carroll, B. & Siguaw, J. (2003). The evolution of electronic distribution: Effects on hotels and intermediaries. *Cornell Hotel and Restaurant Administration Quarterly*, 44(4), pp. 38-50.

Chevalier, J. A. & Mayzlin, D. (2006). The effect of word of mouth on sales: online book reviews. *Journal of Marketing Research*, 43(3), pp. 345–354.

Chircu, A. M. & Kauffman, R. J. (2000). Reintermediation strategies in business-to-business electronic commerce. *International Journal of Electronic Commerce*, 4(4), pp. 7-42.

Christodoulidou, N., Brewer, P., Feinstein, A. H. & Bai, B. (2007). Electronic channels of distribution: Challenges and solutions for hotel operators. *FIU Hospitality and Tourism Review*, 25(2), pp. 92-100.

Christopher, M. (1991). Distribution and customer service. In Baker, M. (Edi.). *The Marketing Book* (2nd ed.). London: Butterworth-Heinemann.

Cline, R. (2001). The future of hospitality E-Business. *Lodging Hospitality,* 57(7), pp. 24-29.

Constantinides, E. (2002). The 4S Web-Marketing Mix model. *Electronic Commerce Research and Applications*, 1(1), pp. 57-76.

Copeland, D. G. & McKenney, J. L. (1988). Airline reservation systems: Lessons from history. *MIS Quarterly*, 12(3), pp. 353–570.

Courtmanche, J. (2000). The 2000 PhoCusWright Travel E-Commerce Survey. *PhoCusWright Executive Conference*, November 14.

Cristiaanse, E. & Zimmerman, R. (1999). Managing electronic channels: the KLM cargo cyberpets case. *Journal of Information Technology*, 14(2), pp. 123-135.

Dabas, S. & Manaktola, K. (2007). Managing reservations through online distribution channels. *International Journal of Contemporary Hospitality Management*, 19(5), pp. 388-396.

Dale, C. (2003). The competitive networks of tourism e-mediaries: new strategies, new advantages. *Journal of Vacation Marketing*, 9(2), pp. 109-118.

Dolnicar, S. & Laesser, C. (2007). Travel agency marketing strategy: insights from Switzerland. *Journal of Travel Research*, 46(2), pp. 133-146.

Dreze, X. & Hussherr, F. X. (2003). Internet advertising: Is anybody watching? *Journal of Interactive Marketing*, 17(4), pp. 8-23.

Dunn, G. (2003). *Making Cents out of Hospitality Distribution.* Unpublished manuscript, William F.Harrah College of Hotel Administration, University of Nevada-Las Vegas, Las Vegas.

Emmer, R. M., Tauck, C., Wilkinson, S. & Moore, R. G. (1993). Marketing hotels using global distribution systems. *Cornell Hotel and Restaurant Administration Quarterly*, 34(6), pp. 80-89.

Emmer, R. M., Tauck, C., Wilkinson, S. & Moore, R. G. (2003). Marketing hotels using global distribution systems. *Cornell Hotel and Restaurant Administration Quarterly,*44(5/6), pp. 94-104.

Enz, C. A. (2003). Hotel pricing in a networked world. *Cornell Hotel and Restaurant Administration*, 44(1), pp. 80-89.

Eyefortravel (2006). Search Engines: A new paradigm in the hotel distribution. *Travel Distribution Summit Europe 2006,* June 2006, Marc Galbis.

French, T. (1998). The future of global distribution systems. *Travel and Tourism Analyst*, (3), pp. 1-17.

Gilbert, D. C. & Powell-Perry, J. (2002). Exploring developments in web based relationship marketing within the hotel industry. *Journal of Hospitality and Leisure Marketing*, 9(3/4), pp. 141-159.

Gilbert, D. C., Beveridge, D. W. & Lee-Kelley, L. (2005). Electronic distribution of hotel rooms -An exploratory study of the European hotel industry. *Journal of Hospitality & Leisure Marketing*, 12(3), pp. 45-61.

Gregory, S. R., Kline, S. F. & Breiter, D. (2005). Group sales and marketing in convention hotels. *Journal of Travel and Tourism Marketing*, 18(1), pp. 67-77.

Grønflaten, Ø. (2009). The tourism information matrix- Differentiating between sources and channels in the assessment of travellers' information search. *Scandinavian Journal of Hospitality and Tourism*, 9(1), pp. 39-64.

Gunter, B., Campbell, V., Touri, M. & Gibson, R. (2009). Blogs, news and credibility. *Aslib Proceedings: New Information Perspectives*, 61(2), pp. 185-204.

Gursoy, D. & McCleary, K. W. (2004). An integrative model of tourists' information search behavior. *Annals of Tourism Research*, 31(2), pp. 353–373.

Gursoy, D., Umbreit, W. T., 2004. Tourist information search behavior: cross-cultural comparison of European Union member states. *International Journal of Hospitality Management,* 23(1), pp. 55–70.

HeBS (2007a). *Web 2.0 vs Search Engines: Are Search Engines Becoming Obsolete in the Web 2.0 frenzy?*, [http://www.hospitalityebusiness.com/dyn/hebsReports_coll165.php]

HeBS (2007b). *A Hotelier's Guide to Budget Planning in '08,* [http://www.hospitalityebusiness.com/dyn/hebsReports_coll170.php]

Helsel, C. & Cullen, K. (2005). Travel Search Engines Redefine Distribution. *HEDNA White Paper Series, June.*

Hennig-Thurau, T. & Walsh. G. (2003). Electronic Word-of-Mouth: Motives for and Consequences of Reading Customer Articulations on the Internet. *International Journal of Electronic Commerce*, 8(2), pp. 51-74.

Hennig-Thurau, T., Gwinner, K. P., Walsh, G. & Gremler, D. D. (2004). Electronic Word-of-Mouth via Consumer-Opinion Platforms: What Motivates Consumers to Articulate Themselves on the Internet? *Journal of Interactive Marketing*, 18(1), pp. 38-52.

Höchstötter, N. & Lewandowski, D. (2009). What users see –Structures in search engine results pages. *Information Sciences*, 179(12), pp. 1796-1812.

Huang, L., Chen, K-H. & Wu, Y-W. (2009). What kind of marketing distribution mix can maximize revenues: The Wholesaler travel agencies' perspective? *Tourism Management*, 30(5), pp. 733-739.

Huang, L-S., Chou, Y-J. & Lan, I-T. (2007). Effects of Perceived Risk, Message Types, and Reading Motives on the Acceptance and Transmission of Electronic Word-of-Mouth communication. *Contemporary Management Research*, 3(4), pp. 299-312.

Hyde, K. F. (2006). Contemporary information search strategies of destination-naive international vacationers. *Journal of Travel and Tourism Marketing*, 21(2/3), pp. 63-76.

iProspects. 2006. *Search engine user behaviour study*. Watertown, MA: iProspects.

Jansen, B. & Spink, A. (2006). How are we searching the World Wide Web? A comparison of nine search engine transaction logs. *Information Processing & Management*, 42(1), pp. 248-263.

Jansen, B., Brown, A. & Resnick, M. (2007). Factors elating to the decision to click on a sponsored link. *Decision Support Systems,* 44(1), pp. 46-59.

Järveläinen, J. & Jussi, P. (2004). Distrust of one's own web skills: a reason for offline booking after online information search. *Electronic Markets*, 14(4), pp. 333-343.

Jeong, M. & Choi, J. (2004). Effects of picture presentations on customers' behavioral intentions on the Web. *Journal of Travel and Tourism Marketing*, 17(2/3), pp. 193-204.

Jung, T. H., Louvieris, P. & Oppewal, H. (2002). Channel management strategy in the eCommerce environment- A portfolio management approach. *Information & Communication Technologies in Tourism, International Conference in Innsbruck*, Austria.

Kang, B., Brewer, K. P. & Baloglu, S. (2007). Profitability and survivability of hotel distribution channels: An industry perspective. *Journal of Travel & Tourism Marketing*, 22(1), pp. 37-50.

Kärcher, K. (1996). The four Global Distribution Systems in the travel and tourism industry. *Electronic Markets*, 6(2), pp. 20-24.

Kasavana, M. L. & Singh, A. J. (2002). Online auctions: dynamic pricing and the lodging industry. *Journal of Hospitality & Leisure Marketing*, 9(3/4), pp. 127-140.

Kim, L. H., Kim, D. J. & Leong, J. K. (2005). The effect of perceived risk on purchase intention in purchasing airline tickets online. *Journal of Hospitality and Leisure Marketing*, 13(2), pp. 33-53.

Kim, W. G. & Kim, D. J. (2004). Factors affecting online hotel reservation intention between online and non-online customers. *International Journal of Hospitality Management*, 23(4), pp. 381-395.

Kolsaker, A., Lee-Kelley, L. & Choy, P. C. (2004). The reluctant Hong Kong consumer: Purchasing travel online. *International Journal of Consumer Studies*, 28(3), pp. 295-304.

Koo, B., Martin, B. & O'Connor, P. (2011). Online distribution of airline tickets: Should airlines adopt a single or a multi-channel approach?. *Tourism Management*, 32(1), pp. 69-74.

Kracht, J. & Wang, Y. (2010). Examining the tourism distribution channel: evolution and transformation. *International Journal of Contemporary Hospitality Management*, 20(1), pp. 90-97.

Lastowka, F. (2002). Search engines under siege: Do paid placement listings infringe trademarks? *Intellectual Property & Technology Law Journal,* 14(7), pp. 1-7.

Law, R. (2009). Disintermediation of hotel reservations: The perception of different groups of online buyers in Hong Kong. *International Journal of Contemporary Hospitality Management*, 21(6), pp. 766-772.

Law, R., Leung, K. & Wong, J. (2004). The impact of the internet on travel agencies. *International Journal of Contemporary Hospitality Management,* 16(2), pp. 100-107.

Law, R., Leung, R. & Buhalis, D. (2009). Information technology applications in hospitality and tourism: a review of publications from 2005 to 2007. *Journal of Travel & Tourism Marketing*, 26(5/6), pp. 599-623.

Law, R., Qi, S. & Buhalis, D. (2010). Progress in tourism management: a review of website evaluation in tourism research. *Tourism Management*, 31(3), pp. 297-313.

Lin, P. J., Jones, E. & Westwood, S. (2009). Perceived risk and risk-relievers in online travel purchase intentions. *Journal of Hospitality Marketing & Management*, 18(8), pp. 782-810.

Litvin, S. W., Goldsmith, R. E. & Pan, B. (2008). Electronic word-of-mouth in hospitality and tourism management. *Tourism Management*, 29(3), pp. 458-468.

Louvieris, P., Jung, T. & Pandazis, G. (2001). Investigating the Web presence of London hotels. *Proceedings of ENTER'2001 Conference*, Montreal, Canada.

Luo, M., Feng, R. M. & Cai, L. (2005). Information search behavior and tourist characteristics. *Journal of Travel and Tourism Marketing*, 17(2/3), pp. 15-26.

Mack, R. W., Blose, J. & Pan, B. (2008). Believe it or not: credibility of blogs in tourism. *Journal of Vacation Marketing*, 14(2), pp. 133-144.

Main, H. (2002). The expansion of technology in small and medium hospitality enterprises with a focus on net technology. *Journal of Information Technology and Tourism*, 4(3/4), pp. 167-175.

McIvor, R., O'Reilly, D. & Ponsonby, S. (2003). The impact of Internet Technologies on the airline industry: current strategies and future developments. *Strategic Change*, 12(1), pp. 31-47.

Medelyan, O., Milne, D., Legg, C. & Witten, I. H. (2009). Mining meaning from Wikipedia. *International Journal of Human-Computer Studies*, 67(9), pp. 716-754.

Miyazaki, A. D. & Fernandez, A. (2001). Consumer perceptions of privacy and security risks for online shopping. *Journal of Consumer Affairs*, 35(1), pp. 27-44.

Morrison, A. M., Jing, S., O'Leary, J. T. & Cai, L. A. (2001). Predicting usage of the Internet for travel bookings: an exploratory study. *Information Technology & Tourism*, 4(1), pp. 15-30.

Murphy, H. C. (2003). The diversity of diffusion of information and communication Technologies in the hospitality and tourism sector: with particular reference to the small and medium hospitality enterprise. Doctoral thesis, University of Wales, Newport.

Murphy, H. C. & Kielgast, C. D. (2008). Do small and medium-sized hotels exploit search engine marketing? *International Journal of Contemporary Hospitality Management*, 20(1), pp. 90-97.

Myung, E., Li, L. & Bai, B. (2009). Managing the distribution channel relationship with e-wholesalers: Hotel operatos' perspective. *Journal of Hospitality Marketing & Management*, 18(8), pp. 811-828.

Nassar, .M. A. (2002). *An evaluation of the World Wide Web (Web) as a strategic marketing tool for the Egyptian hotel sector*. Doctoral thesis, University of Wales, Newport.

O'Connor, P. (2009a). Pay-per-click search engine advertising: are hotel trademarks being abused? *Cornell Hospitality Quarterly*, 50(2), pp. 232-244.

O'Connor, P. (2009b). Trademark infringement in pay-per-click advertising. In Bandyopadhyay, S. (Edi.). *Contemporary Research in E-Branding.* Hershey, PA: Information Science Reference, 148-160.

O'Connor, P. & Frew, A. J. (2000). Evaluating electronic channels of distribution in the hotel sector: A Delphi study. *Information Technology and Tourism*, 3(3/4), pp. 177-193.

O'Connor, P. & Frew, A. J. (2002a). The future of direct retailing of travel and tourism products: the influence of information technology. *International Journal of Tourism Research*, 4(1), pp. 1-15.

O'Connor, P. & Frew, A. J. (2002b). The future of hotel electronic distribution: Expert and Industry perspectives. *Cornell Hotel and Restaurant Administration Quarterly,* 43(3), pp. 33-46.

O'Connor, P. & Frew, A. J. (2004). An evaluation methodology for hotel electronic channels of distribution. *International Journal of Hospitality Management,* 23(2), pp. 179-199.

O'Connor, P. & Murphy, J. (2004). Research on information technology in the hospitality industry. *International Journal of Hospitality Management*, 23(4), pp. 473-484.

O'Connor, P. & Piccoli, G. (2003). Marketing hotels using global distribution systems revisited. *Cornell Hotel and Restaurant Administration Quarterly*, 44(3), pp. 105-114.

Öörni, A. (2003). Consumer Search in Electronic Markets: An Experimental Analysis of Travel Services. *European Journal of Information Systems*, 12(1), pp. 30-40.

Öorni, A. & Klein, S. (2003). Electronic travel markets: Elusive effects on consumer' search behavior. *Information Technology & Tourism*, 6(1), pp. 3-11.

Palmer, A. & McCole, P. (1999). The virtual re-intermediation of travel services: a conceptual framework and empirical investigation. *Journal of Vacation Marketing*, 6(1), pp. 33-47.

Pan, B. & Li, X. (2011). The long tail of destination image and online marketing. *Annals of Tourism Research*, 38(1), pp. 132-152.

Pan, B. & Fesenmaier, D. R. (2000). A Typology of Tourism-Related Web Sites: Its Theoretical Background and Implications. *Information Technology & Tourism* 3(3/4), pp. 155-166.

Pan, B. & Fesenmaier, D. R. (2006). Online information search: Vacation planning process. *Annals of Tourism Research*, 33(3), pp. 809-832.

Pan, B., Litvin, S. W. & O'Donnell, T. E. (2007). Understanding accommodation search query formulation: The first step in putting 'heads in beds'. *Journal of Vacation Marketing*, 13(4), pp. 371-381.

Pan, B., MacLaurin, T. & Crotts, J. (2007). Travel blogs and the implications for destination marketing. *Journal of Travel Research*, 46(1), pp. 35-45.

Park, C. & Lee, T. M. (2009). Information direction, website reputation and eWOM effect: A moderating role of product type. *Journal of Business Research*, 62(1), pp. 61-67.

Pearce, D. G. & Taniguchi, M. (2008). Channel performance in multi-channel tourism distribution systems? *Journal of Travel Research*, 46(3), pp. 256-267.

Pearce, D. & Schott, C. (2005). Tourism distribution channels: The visitors' perspective. *Journal of Travel Research*, 44(1), pp. 50-63.

PhoCusWright*, Online Travel Overview*, Oct 2005

Pinkerton, B. (2000). *WebCrawler: Finding What People Want*. Doctoral thesis, University of Washington, Seattle, WA.

PriceWaterhouseCoopers (2006). How to maintain success in the online travel space. *Hospitality Directions Europe Edition*, Issue 14, November 2006

Ratchford, B., Talukdar, D. & Lee, M. (2001). A Model of Consumer Choice of the Internet as an Information Source. *International Journal of Electronic Commerce,* 5(3), pp. 7-21.

Sarkar, M., Butler, B. & Steinfield, C. (1998). Cybermediaries in electronic marketspace: toward theory building. *Journal of Business Research*, 41(3), pp. 215-221.

Sen, R. (2005). Optimal search engine marketing strategy. *International Journal of Electronic Commerce,* 10(1), pp. 9-25.

Sen, S. & Lerman, D. (2007). Why are you telling me this? An examination into negative consumer reviews on the Web. *Journal of Interactive Marketing*, 21(4), pp. 76-94.

Shapiro, D. & Zillante, A. (2009). Naming your own price mechanisms: Revenue gain or drain? *Journal of Economic Behavior & Organization*, 72(2), pp. 725-737.

Smith, A. D. & Rupp, W. T. (2004). E-traveling via information technology: an inspection of possible trends, *Services Marketing Quarterly*, 25(4), pp. 71-94.

Smith, C. & Jenner, P. (1998). Tourism and the Internet. *Travel and Tourism Analyst*, (1), pp. 62-81.

Sun, T., Youn, S., Wu, G. & Kuntaraporn, M. (2006). Online word-of-mouth (or mouse): An exploration of its antecedents and consequences. *Journal of Computer-Mediated Communication*, 11(4), pp. 1104-1127.

Susskind, A. M., Bonn, M. A. & Dev, C. S. (2003). To Look or Book: An Examination of Consumers Apprehensiveness toward Internet use. *Journal of Travel Research*, 41(3), pp. 256-264.

Truitt, L., Teye, V. & Farris, M. (1991). The role of Computer Reservation Systems: International implications for the tourism industry. *Tourism Management*, 12(1), pp. 21-36.

Tsay, A. A. & Agrawal, N. (2004). Channel conflict and coordination in the e-commerce age. *Production & Operations Management*, 13(1), pp. 93-111.

Tse, A. C. (2003). Disintermediation of travel agents in the hotel industry. *International Journal of Hospitality Management*, 22(4), pp. 453-460.

Vermeulen, I. E. & Seegers, D. (2009). Tried and tested: The impact of online hotel reviews on consumer consideration. *Tourism Management*, 30(1), pp. 123-127.

Walle, A. (1999). Tourism and Internet: opportunities for direct marketing. *Journal of Travel Research*, 35(1), pp. 72-77

Wang, Y. C. & Fesenmaier, D. R. (2004). Modeling Participation in an Online Travel Community. *Journal of Travel Research*, 42(3), pp. 261-270.

Wang, Y. C. & Qualls, W. (2007). Technology adoption by hospitality organizations: towards a theoretical framework. *International Journal of Hospitality Management*, 26(3), pp. 560-573.

Wang, Y. C., Yu, Q. & Fesenmaier, D. R. (2002). Defining the virtual tourist community: implications for tourism marketing. *Tourism Management*, 23(4), pp. 407-417.

Weber, K. & Roehl, W. (1999). Profiling people searching for and purchasing travel products on the World Wide Web. *Journal of Travel Research* 37(3), pp. 291-298.

Woodside, A. G. & King, R. I. (2001). An updated model of travel and tourism purchase-consumption systems. *Journal of Travel and Tourism Marketing*, 10(1), pp. 3-27.

Wynne, C. *et al.* (2001). The impact of the Internet on the distribution value chain: The case of the South African tourism industry. *International Marketing Review,* 18(4), pp. 420-431.

Xiang, Z. & Gretzel, U. (2010). Role of social media in online travel information search. *Tourism Management*, 31(2), pp. 179-188.

Ye, Q., Law, R. & Gu, B. (2009). The impact of online user reviews on hotel room sales. *International Journal of Hospitality Management*, 28(1), pp. 180-182.

Zehrer, A., Crotts, J. C. & Magnini, C. P. (2011). The perceived usuefulness of blog postings: An extensión of the expectancy-disconfirmation paradigm. *Tourim Management*, 32(1), pp. 106-113.